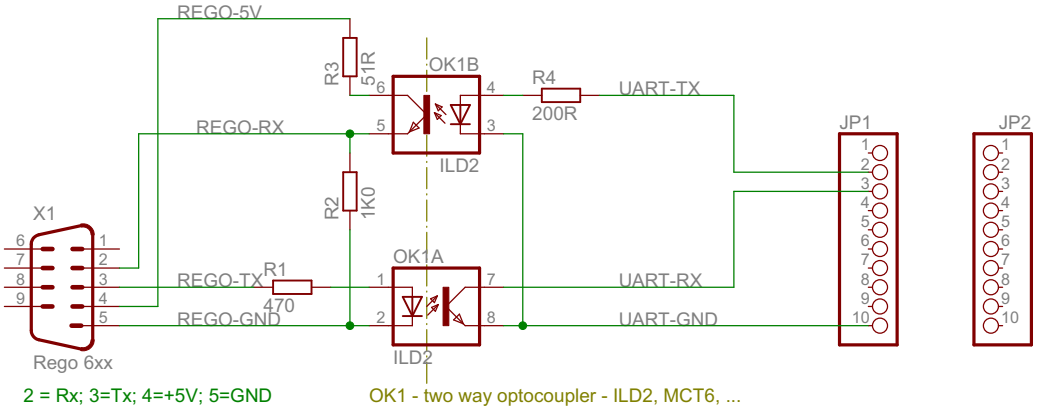
REGO-5V
R3
51R
OK1B
R4
200R
UART-TX
REGO-RX
ILD2
JP1
JP2
R2
1K0
X1
OK1A
REGO-TX
R1
470
UART-RX
REGO-GND
UART-GND
ILD2
Rego 6xx
2 = Rx; 3=Tx; 4=+5V; 5=GND
OK1 - two way optocoupler - ILD2, MCT6, ...