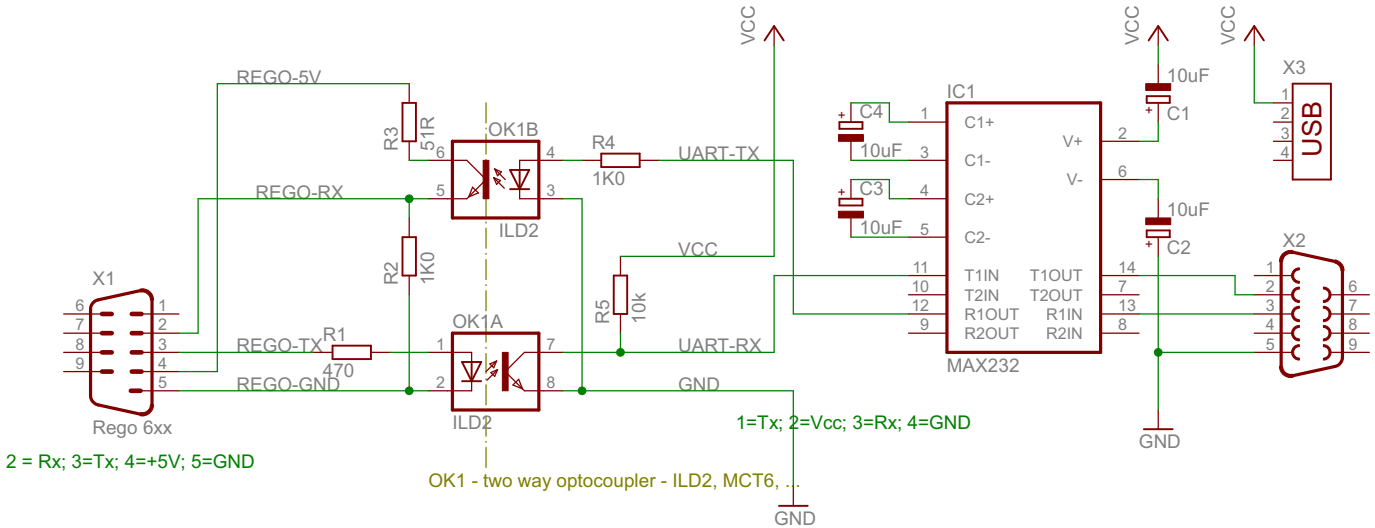

23.4.2009 14:48:42 D:\$user\eagle\IVT\ivt_serial.sch (Sheet: 1/1)